RF TEST ENCLOSURE

RT-1331

DATA SHEET

1. Main features

RT-1331 RF Test Enclosure supports broad band testing frequency and provides optimal testing condition to test mobile device.

- Outstanding durability and simple structure.
- Convenient use and maintenance.
- Supports 2x I/O interface panel (IA-series)
- High performance RF layered absorber on inside walls
- High shielding effectiveness using double layer gasket structure.
- 19" Rack Mountable
- Fixture mounting holes in the top and side walls
- Support air ventilation with an externally mounted AC fan.

2 . Product specification

	W (mm)	D (mm)	H (mm)
Outer Size (Closed)	434	695	444
Outer Size (Opened)	555	1011	444
Inner Size	368	366	370
Weight	Approx. 34 Kgf		
Packing Size	595	805	625
Packing Weight	Approx. 40 Kgf		
Interface	I/O Panel : IA-Series		

Shielding effectiveness

Frequency – Unit : MHz	Shielding effectiveness – Unit : dB
100-3000	>80
3000-6000	>70

The shielding effectiveness in the above is measured when the blank I/O panel is attached.

3. Dimensions

Outside Dimensions

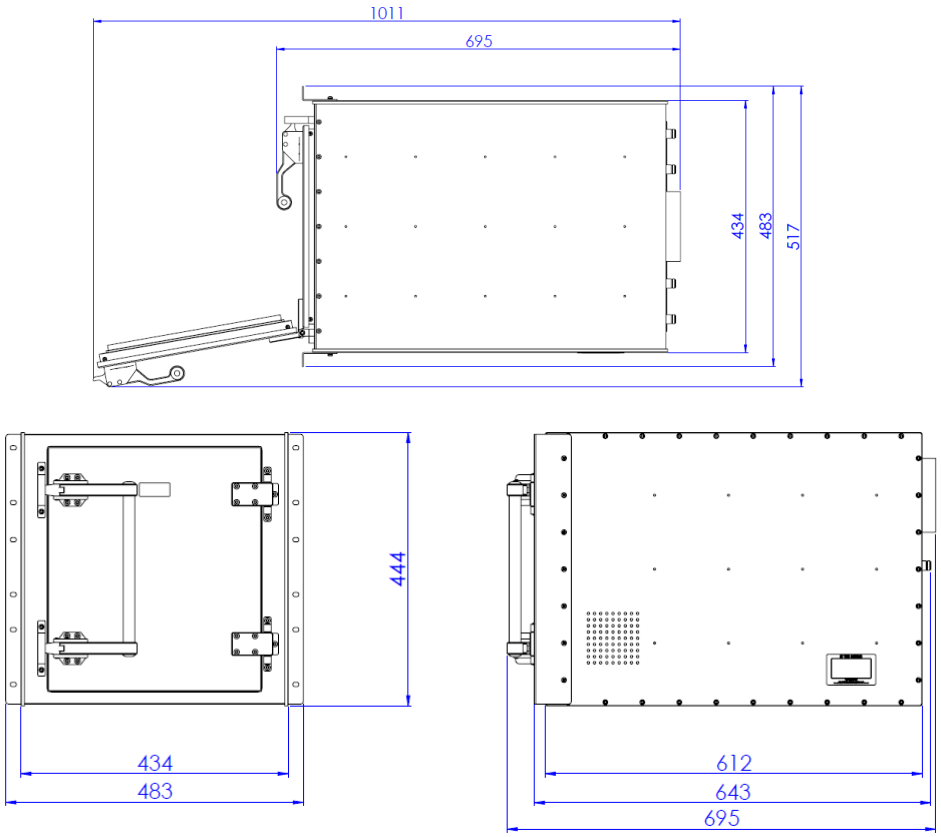

Inside Dimensions

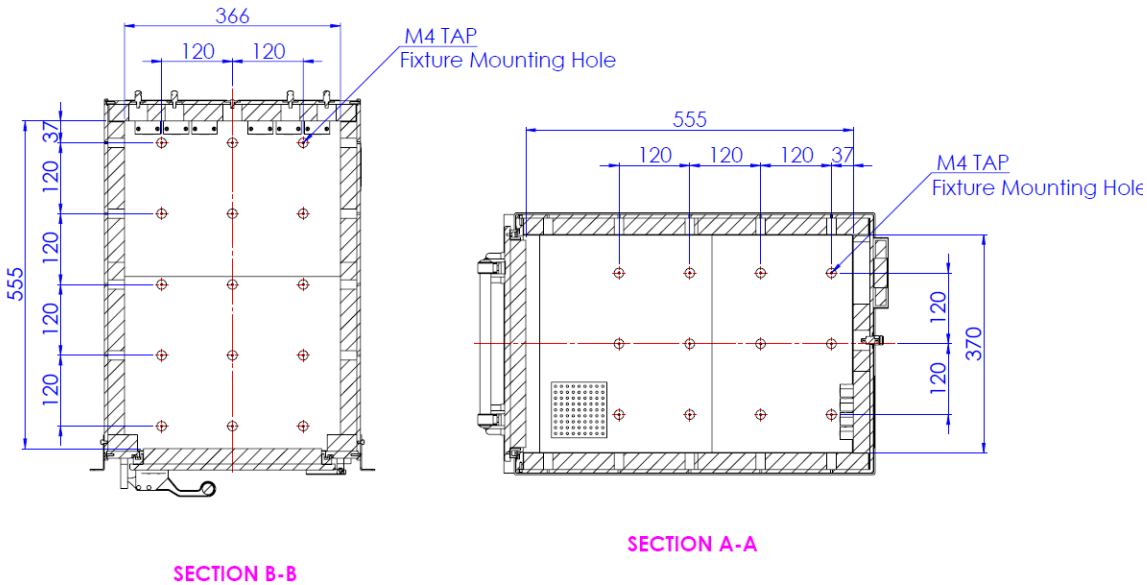

Roottek.co.kr

TEL: +82-70-5138-0370

FAX: +82-31-927-9201

e-mail: roottek@roottek.co.kr

** Specification of chamber can be updated without prior notice **